Work Order ID 90601

90601

September-20-12 11:12:44 AM

Item ID: D350-604-041 **Accept** *N900040100* **Setup Start** *NS1*

Revision ID: **Stop** *NS2*

Item Name: Rear Locker Extender

Start Date: 20/09/2012 **Start Qty:** 1.00 *1*

Required Date: 04/10/2012 **Req'd Qty:** 1.00 *1*

Reference:

Cust Item ID:

Customer:

Approvals: **Process Plan:** MLJ **Date:** 12-09-12 **Tooling:** **Date:**

QC: **Date:** **SPC (Y/N):** **Date:**

Run Start *NR1*

Stop *NR2*

Sequence ID/ Work Center ID	Operation Description	Set Up/ Run Hours	Tool ID	Tool #	Plan Code	Accept Qty	Reject Qty	Reject Number	Insp. Stamp

Draw Nbr	Revision Nbr
D2273	F
D350-604-041	B

100 0.00

100

DC

Document Control

DOCUMENT CONTROL

Memo 0.00

Photocopy bluefile and create labels per PPP D350-604-041 CHG004

DAS 16 12/10/12

MLJ 12-10-2

110 0.00

110

Purchasing

Purchasing

PURCHASING

CZ 12/09/21 (1)

Memo 0.00

Issue P/O: 17976

Description: D350-604-041 Rear locker extender.

Supplier: Delastek.

Certification of Conformity and process sheet from Delastek is required.

4 x 2600-6 Camlock stud - Ship to Delastek B

4 x 2600-LW Retaining washers - Ship to Delastek B

#39

DQA: _____ Date: _____

NCR: Yes / No

WORK ORDER NON-CONFORMANCE / UPDATE

QA Closed: Date:

Work Order: _____

Part No. _____

NCR No. _____

DISPOSITION

- Rework ☐
- Scrap ☐
- Use-as-is ☐
- Work Order Update ☐

AGAINST DEPARTMENT/PROCESS

- Skid-tube ☐
- Machining ☐
- Thermoforming ☐
- Large Fab ☐
- Crosstube ☐
- Small Fab ☐
- Finishing ☐
- Composite ☐
- Water Jet ☐
- Prod. Eng. Coor. ☐
- Rec/Store/Packaging ☐
- Supplier ☐
- Engineering ☐
- Quality ☐
- Other ☐

Root Cause		Date	Step	Qty	Description of work order update or Non-conformance	Initial Chief Eng	Action Description	Sign & Date	Verification	QC Inspector
Doc/Data										
Equip/Tooling										
Operator										
Material										
Setup										
Other										
Process										
Supplier										
Training										
Unapproved										

FAULT CATEGORY

Landing Gear

- ☐ Bending
- ☐ Centre Not Concentric to O/S
- ☐ Cracks
- ☐ Crushed/Crimped
- ☐ Cuffs
- ☐ Heat Treat
- ☐ Inspection Strip in Tube
- ☐ Ripples in Bend
- ☐ Torque Waves in Extrusion
- ☐ Turning Sequence
- ☐ Wave/Twist in Tube

General

- ☐ Bend
- ☐ BOM/Route
- ☐ Broken/Damaged
- ☐ Burrs
- ☐ Contamination
- ☐ Countersink
- ☐ Cut Too Short
- ☐ Drill Holes
- ☐ Drawing
- ☐ Finish
- ☐ Folio
- ☐ Grain
- ☐ Hardware
- ☐ Inspection Incomplete
- ☐ Instructions Incomplete/Unclear
- ☐ Maintenance
- ☐ Mislabeled
- ☐ Misread
- ☐ Offset
- ☐ Out of Calibration
- ☐ Out of Sequence
- ☐ Outside Dimensions
- ☐ Ovalized
- ☐ Over/Under tolerance
- ☐ Part Incorrect
- ☐ Part Lost/Missing
- ☐ Part Moved
- ☐ Positioned Wrong
- ☐ Power Loss/Surge
- ☐ Pressure/Forced
- ☐ Temperature/Cure
- ☐ Weld
- ☐ Wrong Stock Pulled
- ☐ Other

_____

_____

_____

Work Order ID 90601

September-20-12 11:12:44 AM

90601

Item ID: D350-604-041 **Accept** *N900040100* **Setup Start** *NS1*

Revision ID: **Stop** *NS2*

Item Name: Rear Locker Extender

Start Date: 20/09/2012 **Start Qty:** 1.00 *1*

Required Date: 04/10/2012 **Req'd Qty:** 1.00 *1*

Reference:

Cust Item ID:

Customer:

Approvals: **Process Plan:** _____ **Date:** _____ **Tooling:** _____ **Date:** _____

QC: _____ **Date:** _____ **SPC (Y/N):** _____ **Date:** _____

Run Start *NR1*

Stop *NR2*

Sequence ID/ Work Center ID	Operation Description	Set Up/ Run Hours	Tool ID	Tool #	Plan Code	Accept Qty	Reject Qty	Reject Number	Insp. Stamp
120	Receive & Inspect for Damage & Mat'l Certs	0.00							
120	Packaging								
Packaging	**Memo**	0.00					4/2/12		
Packaging	Ensure a copy of Certification of Conformity and process sheet from Delastek is attached.								
130	QC5- Inspect part completeness to step on W/O	0.00							
130	#0039								
QC	**Memo**	0.00							
Quality Control	Check hole locations to template. DT 8824 Check process sheet and audit.								
140		0.00							
140									
Small Fab	**Memo**	0.00							
Small Fab	INSTALL DECALS AS PER DWG						4/2/12		

DAS 16 5-30 17/10/12

DQA: _____ Date: _____

NCR: Yes / No

WORK ORDER NON-CONFORMANCE / UPDATE

QA Closed: Date:

Work Order: _____

Part No. _____

NCR No. _____

DISPOSITION

- Rework ☐
- Scrap ☐
- Use-as-is ☐
- Work Order Update ☐

AGAINST DEPARTMENT/PROCESS

- Skid-tube ☐
- Machining ☐
- Thermoforming ☐
- Large Fab ☐
- Crosstube ☐
- Small Fab ☐
- Finishing ☐
- Composite ☐
- Water Jet ☐
- Prod. Eng. Coor. ☐
- Rec/Store/Packaging ☐
- Supplier ☐
- Engineering ☐
- Quality ☐
- Other ☐

Root Cause		Date	Step	Qty	Description of work order update or Non-conformance	Initial Chief Eng	Action Description	Sign & Date	Verification	QC Inspector
Doc/Data	☐									
Equip/Tooling	☐									
Operator	☐									
Material	☐									
Setup	☐									
Other	☐									
Process	☐									
Supplier	☐									
Training	☐									
Unapproved	☐									

FAULT CATEGORY

Landing Gear

- ☐ Bending
- ☐ Centre Not Concentric to O/S
- ☐ Cracks
- ☐ Crushed/Crimped
- ☐ Cuffs
- ☐ Heat Treat
- ☐ Inspection Strip in Tube
- ☐ Ripples in Bend
- ☐ Torque Waves in Extrusion
- ☐ Turning Sequence
- ☐ Wave/Twist in Tube

General

- ☐ Bend
- ☐ BOM/Route
- ☐ Broken/Damaged
- ☐ Burrs
- ☐ Contamination
- ☐ Countersink
- ☐ Cut Too Short
- ☐ Drill Holes
- ☐ Drawing
- ☐ Finish
- ☐ Folio
- ☐ Grain
- ☐ Hardware
- ☐ Inspection Incomplete
- ☐ Instructions Incomplete/Unclear
- ☐ Maintenance
- ☐ Mislabeled
- ☐ Misread
- ☐ Offset
- ☐ Out of Calibration
- ☐ Out of Sequence
- ☐ Outside Dimensions
- ☐ Ovalized
- ☐ Over/Under tolerance
- ☐ Part Incorrect
- ☐ Part Lost/Missing
- ☐ Part Moved
- ☐ Positioned Wrong
- ☐ Power Loss/Surge
- ☐ Pressure/Forced
- ☐ Temperature/Cure
- ☐ Weld
- ☐ Wrong Stock Pulled
- ☐ Other

_____

_____

_____

Work Order ID 90601

September-20-12 11:12:44 AM

90601

Item ID: D350-604-041 **Accept** *N900040100* **Setup Start** *NS1*

Revision ID:

Item Name: Rear Locker Extender **Stop** *NS2*

Start Date: 20/09/2012 **Start Qty:** 1.00 *1* **Cust Item ID:**

Required Date: 04/10/2012 **Req'd Qty:** 1.00 *1* **Customer:**

Reference:

Approvals: **Process Plan:** _____ **Date:** _____ **Tooling:** _____ **Date:** _____ **Run Start** *NR1*

QC: _____ **Date:** _____ **SPC (Y/N):** _____ **Date:** _____ **Stop** *NR2*

Sequence ID/ Work Center ID	Operation Description	Set Up/ Run Hours	Tool ID	Tool #	Plan Code	Accept Qty	Reject Qty	Reject Number	Insp. Stamp
150 *150* QC Quality Control	QC5- Inspect part completeness to step on W/O	0.00							
	Memo	0.00							
160 *160* Packaging Packaging	Packaging	0.00							
	Memo	0.00							
	Identify and pack for shipping as per PPP D350-604-041 Location: SO PPP Rev: I								
170 *170* QC Quality Control	QC21- Final Inspection - Work Order Release	0.00							
	Memo	0.00							

DAS 15 17/10/12

12/10/2 SP

12/10/3 [illegible]

MF 12-10-2

DQA: _____ Date: _____

NCR: Yes / No

WORK ORDER NON-CONFORMANCE / UPDATE

QA Closed: Date:

Work Order: _____

Part No. _____

NCR No. _____

DISPOSITION

- Rework ☐
- Scrap ☐
- Use-as-is ☐
- Work Order Update ☐

AGAINST DEPARTMENT/PROCESS

- Skid-tube ☐
- Machining ☐
- Thermoforming ☐
- Large Fab ☐
- Crosstube ☐
- Small Fab ☐
- Finishing ☐
- Composite ☐
- Water Jet ☐
- Prod. Eng. Coor. ☐
- Rec/Store/Packaging ☐
- Supplier ☐
- Engineering ☐
- Quality ☐
- Other ☐

Root Cause		Date	Step	Qty	Description of work order update or Non-conformance	Initial Chief Eng	Action Description	Sign & Date	Verification	QC Inspector
Doc/Data	☐									
Equip/Tooling	☐									
Operator	☐									
Material	☐									
Setup	☐									
Other	☐									
Process	☐									
Supplier	☐									
Training	☐									
Unapproved	☐									

FAULT CATEGORY

Landing Gear

- ☐ Bending
- ☐ Centre Not Concentric to O/S
- ☐ Cracks
- ☐ Crushed/Crimped
- ☐ Cuffs
- ☐ Heat Treat
- ☐ Inspection Strip in Tube
- ☐ Ripples in Bend
- ☐ Torque Waves in Extrusion
- ☐ Turning Sequence
- ☐ Wave/Twist in Tube

General

- ☐ Bend
- ☐ BOM/Route
- ☐ Broken/Damaged
- ☐ Burrs
- ☐ Contamination
- ☐ Countersink
- ☐ Cut Too Short
- ☐ Drill Holes
- ☐ Drawing
- ☐ Finish
- ☐ Folio
- ☐ Grain
- ☐ Hardware
- ☐ Inspection Incomplete
- ☐ Instructions Incomplete/Unclear
- ☐ Maintenance
- ☐ Mislabeled
- ☐ Misread
- ☐ Offset
- ☐ Out of Calibration
- ☐ Out of Sequence
- ☐ Outside Dimensions
- ☐ Ovalized
- ☐ Over/Under tolerance
- ☐ Part Incorrect
- ☐ Part Lost/Missing
- ☐ Part Moved
- ☐ Positioned Wrong
- ☐ Power Loss/Surge
- ☐ Pressure/Forced
- ☐ Temperature/Cure
- ☐ Weld
- ☐ Wrong Stock Pulled
- ☐ Other

_____

_____

_____

Picklist Print

September-20-12 11:12:48 AM

Work Order ID: 90601

90601

Parent Item: D350-604-041

D350-604-041

Parent Item Name: Rear Locker Extender

Start Date: 20/09/2012 **Required Date:** 04/10/2012

Start Qty: 1.00 **Required Qty:** 1.00

Comments: IPP Rev:Q03.12.01ReformatKJ/RF IPP REV:R
12.02.07 AS PER ECN12-521 DD verf:JLM IPP REV:S 12.04.04
AS PER DWG REV.B DD VERF:EC

Component Item ID/ Item Name	Replacement Item ID	Mfg/ Purch	Bin Item	Primary Location	Last Location	Route Seq ID	Unit of Measure	Qty on Hand	Qty per Kit	Total Qty	Qty Issued	Date Issued	Status
D2728-1 *D2728-1* Dart Logo label		Manufactured	No				Each	0.0000	**	1			
D2729-1 *D2729-1* Dart Logo label		Manufactured	No				Each	0.0000	**	1			
2600-6 *2600-6* Camlock Stud		Purchased	No			110	Each	473.0000	4 **	4			

Location		Loc Qty	Loc Code
396		37	
	122763	37	
ST380		236	
	120077	8	
	121287	32	
	121556	4	
	122317	6	
	122335	6	
	122441	180	
ST396		200	
	122973	200	

DQA: _____ Date: _____

NCR: Yes / No

WORK ORDER NON-CONFORMANCE / UPDATE

QA Closed: Date:

Work Order: _____

Part No. _____

NCR No. _____

DISPOSITION

- Rework ☐
- Scrap ☐
- Use-as-is ☐
- Work Order Update ☐

AGAINST DEPARTMENT/PROCESS

- Skid-tube ☐
- Machining ☐
- Thermoforming ☐
- Large Fab ☐
- Crosstube ☐
- Small Fab ☐
- Finishing ☐
- Composite ☐
- Water Jet ☐
- Prod. Eng. Coor. ☐
- Rec/Store/Packaging ☐
- Supplier ☐
- Engineering ☐
- Quality ☐
- Other ☐
- ☐

Root Cause		Date	Step	Qty	Description of work order update or Non-conformance	Initial Chief Eng	Action Description	Sign & Date	Verification	QC Inspector
Doc/Data	☐									
Equip/Tooling	☐									
Operator	☐									
Material	☐									
Setup	☐									
Other	☐									
Process	☐									
Supplier	☐									
Training	☐									
Unapproved	☐									

FAULT CATEGORY

Landing Gear

- ☐ Bending
- ☐ Centre Not Concentric to O/S
- ☐ Cracks
- ☐ Crushed/Crimped
- ☐ Cuffs
- ☐ Heat Treat
- ☐ Inspection Strip in Tube
- ☐ Ripples in Bend
- ☐ Torque Waves in Extrusion
- ☐ Turning Sequence
- ☐ Wave/Twist in Tube

General

- ☐ Bend
- ☐ BOM/Route
- ☐ Broken/Damaged
- ☐ Burrs
- ☐ Contamination
- ☐ Countersink
- ☐ Cut Too Short
- ☐ Drill Holes
- ☐ Drawing
- ☐ Finish
- ☐ Folio
- ☐ Grain
- ☐ Hardware
- ☐ Inspection Incomplete
- ☐ Instructions Incomplete/Unclear
- ☐ Maintenance
- ☐ Mislabeled
- ☐ Misread
- ☐ Offset
- ☐ Out of Calibration
- ☐ Out of Sequence
- ☐ Outside Dimensions
- ☐ Ovalized
- ☐ Over/Under tolerance
- ☐ Part Incorrect
- ☐ Part Lost/Missing
- ☐ Part Moved
- ☐ Positioned Wrong
- ☐ Power Loss/Surge
- ☐ Pressure/Forced
- ☐ Temperature/Cure
- ☐ Weld
- ☐ Wrong Stock Pulled
- ☐ Other

_____

_____

_____

Picklist Print

September-20-12 11:12:48 AM

Work Order ID: 90601

Parent Item: D350-604-041

Parent Item Name: Rear Locker Extender

90601
D350-604-041

Start Date: 20/09/2012 **Required Date:** 04/10/2012
Start Qty: 1.00 **Required Qty:** 1.00

2600-LW | Purchased | No | 110 | Each | 528.0000 | 4 | 4

2600-LW
Camloc Retaining Washer

** CL 12/09/21

Location		Loc Qty	Loc Code	
380		180		
	122452	180		
ST380		148		
	122317	148		4
ST396		200		
	122973	200		

D350-604-041P | Purchased | No | 110 | Each | 3.0000 | 1 | 1

D350-604-041P
Rear Locker Extender

** 90601

Location		Loc Qty	Loc Code	
CA		2		
	88868	1		
	88877	1		
ST		1		
	74041	0		
	87197	1		

Pto →

D2268 | Manufactured | No | 140 | Each | 41.0000 | 1 | 1

D2268
Decal

**

Location		Loc Qty	Loc Code	
ST008		41		
	69592	2		
	78908	1		
	80010	13		80010
	86752	11		
	88883	14		

D2269 B 86977

DQA: _____ Date: _____

NCR: Yes / No

WORK ORDER NON-CONFORMANCE / UPDATE

QA Closed: Date:

Work Order: 90601

Part No. D350-604-041

NCR No. _____

DISPOSITION

Rework ☐
Scrap ☐
Use-as-is ☐
Work Order Update ☐

AGAINST DEPARTMENT/PROCESS

Skid-tube ☐ Crosstube ☐ Water Jet ☐ Engineering ☐
Machining ☐ Small Fab ☐ Prod. Eng. Coor. ☐ Quality ☐
Thermoforming ☐ Finishing ☐ Rec/Store/Packaging ☐ Other ☐
Large Fab ☐ Composite ☐ Supplier ☐

Root Cause		Date	Step	Qty	Description of work order update or Non-conformance	Initial Chief Eng	Action Description	Sign & Date	Verification	QC Inspector
Doc/Data	☐				ADD D2269 to Kit		D2269 B 86944		ALREADY IN	
Equip/Tooling	☐									
Operator	☐									
Material	☐									
Setup	☐									
Other	☐									
Process	☐									
Supplier	☐									
Training	☐									
Unapproved	☐									

FAULT CATEGORY

Landing Gear

☐ Bending
☐ Centre Not Concentric to O/S
☐ Cracks
☐ Crushed/Crimped
☐ Cuffs
☐ Heat Treat
☐ Inspection Strip in Tube
☐ Ripples in Bend
☐ Torque Waves in Extrusion
☐ Turning Sequence
☐ Wave/Twist in Tube

General

☐ Bend
☐ BOM/Route
☐ Broken/Damaged
☐ Burrs
☐ Contamination
☐ Countersink
☐ Cut Too Short
☐ Drill Holes
☐ Drawing
☐ Finish
☐ Folio
☐ Grain
☐ Hardware
☐ Inspection Incomplete
☐ Instructions Incomplete/Unclear
☐ Maintenance
☐ Mislabeled
☐ Misread
☐ Offset
☐ Out of Calibration
☐ Out of Sequence
☐ Outside Dimensions
☐ Ovalized
☐ Over/Under tolerance
☐ Part Incorrect
☐ Part Lost/Missing
☐ Part Moved
☐ Positioned Wrong
☐ Power Loss/Surge
☐ Pressure/Forced
☐ Temperature/Cure
☐ Weld
☐ Wrong Stock Pulled
☐ Other

_____
_____
_____

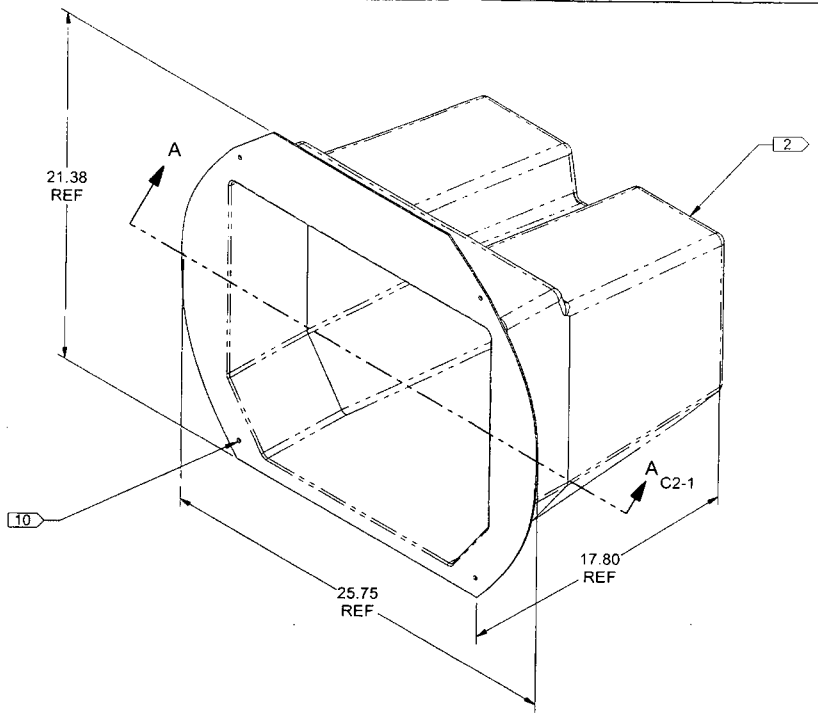

SHOP COPY
RETURN TO
ENGINEER
UNCONTROLLED
SUBJECT TO
WITHDRAWAL
WORK ORDER
NO. 90601
MCJ
12-09-20

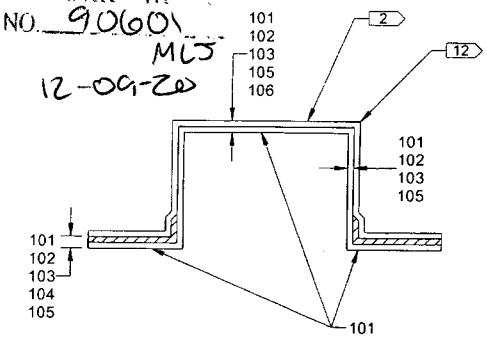

SECTION A-A
C4-1

D2273 REAR LOCKER EXTENDER

RELEASED
2012 -08- 22

NOTES (OPTION A):
1) MATERIALS:
RESIN: DERAKANE 470-36/411/510A40
FIBRE: 9 oz = 9.7 oz 7781 WEAVE "S" GLASS
18 oz = 18.0 oz ROVING "E" GLASS
2) FINISH: FINISH THIS SURFACE WITH DUPONT GREY PRIMER LE 3404-S/LE 1175-S
3) TOLERANCES: PER DART QSI 018 UNLESS OTHERWISE NOTED
4) UNITS: INCHES UNLESS OTHERWISE NOTED
5) BREAK SHARP EDGES: 0.005 TO 0.010 MAX
6) IDENTIFICATION: IDENTIFY PER QSI 044 6.1
7) WEIGHT: 7.75 lbs NOMINAL, 10.0 lbs MAXIMUM
8) LAMINATE PER DART QSI 006
LAMINATION SCHEDULE PER THIS DRAWING
9) LAYUP USING DT8010 MOLD. WET LAYUP NO BAG/VACCUM
10) TRIM & DRILL PER DT8020. OPEN HOLES TO Ø0.257 (4 PLACES)
11) CONSTRUCTION:
101-WHITE GLOSS GELCOAT # GEL 2330PAWK745 TO MIN THICKNESS OF 0.020, MAX THICKNESS OF 0.040
102-9 oz ALL OVER
103-18 oz ALL OVER
104-18 oz REINFORCE FRONT FLANGE EXTENDING 2" ON SIDES
105-9 oz ALL OVER
106-PEEL PLY
12) MATTE TO HOLD DOWN CORNERS AS REQUIRED

G NOTES (OPTION B):
1) MATERIALS:
RESIN: HETRON FR 650 T-20
FIBRE: 1.5 oz RANDOM FIBERGLASS MAT
CATALYST: CADOX M-50A
2) FINISH: FINISH THIS SURFACE WITH DUPONT GREY PRIMER LE 3404-S/LE 1175-S
3) TOLERANCES: PER DART QSI 018 UNLESS OTHERWISE NOTED
4) UNITS: INCHES UNLESS OTHERWISE NOTED
5) BREAK SHARP EDGES: 0.005 TO 0.010 MAX
6) IDENTIFICATION: IDENTIFY PER QSI 044 6.1
7) WEIGHT: 8.5 lbs NOMINAL, 10.0 lbs MAXIMUM
8) LAMINATE PER THIS DRAWING
9) LAYUP USING DT8010 MOLD. WET LAYUP NO BAG/VACCUM
10) TRIM & DRILL PER DT8020. OPEN HOLES TO Ø0.257 (4 PLACES)
11) CONSTRUCTION:
101-WHITE GLOSS GELCOAT # G730AA1100 TO MIN THICKNESS OF 0.020, MAX THICKNESS OF 0.040
102-1.5 oz RANDOM FIBERGLASS MAT
103-N/A
104-N/A
105-1.5 oz RANDOM FIBERGLASS MAT
106-N/A
12) N/A
13) CATALYZE GELCOAT AND RESIN @ 1.5% CADOX M-50A

REV.	DESCRIPTION	BY	DATE
G	ADD MANUFACTURING OPTION B, ZN B5-1	DC	12.08.08
F	PRIMER LE 3404-S/LE 1175-S WAS 1144-S, ZN A6-1	DC	12.02.27
E	CHANGED SURFACE FINISH FROM 944W005 GELCOAT TO 2330PAWK745 GELCOAT, ZN A7-1. UPDATED DWG TO CURRENT STANDARDS.	DC	12.02.02
D	REMOVE EPOCAST, ADD SURFACE FINISH	CP	02.04.01
C	CLARIFY MATERIAL, LAYUP, AND TOOLING	RF	02.01.30
B	RE-DRAWN	MM	96.05.27

DESIGN	JB	**DART AEROSPACE LTD**
DRAWN	BC	HAWKESBURY, ONTARIO, CANADA
CHECKED	RF	DRAWING NO. D2273 REV. G
MFG. APPR.		SHEET 1 OF 1
APPROVED		TITLE 350 REAR LOCKER EXTENDER SCALE NTS
DE APPR.		
DATE	12.08.08	

COPYRIGHT © 1996 BY DART AEROSPACE LTD
THIS DOCUMENT IS PRIVATE AND CONFIDENTIAL AND IS SUPPLIED ON THE EXPRESS CONDITION THAT IT IS NOT TO BE USED FOR ANY PURPOSE OR COPIED OR COMMUNICATED TO ANY OTHER PERSON WITHOUT WRITTEN PERMISSION FROM DART AEROSPACE LTD.

DQA: _____ Date: _____

NCR: Yes / No

WORK ORDER NON-CONFORMANCE / UPDATE

QA Closed: Date:

Work Order: _____

Part No. _____

NCR No. _____

DISPOSITION

- Rework ☐
- Scrap ☐
- Use-as-is ☐
- Work Order Update ☐

AGAINST DEPARTMENT/PROCESS

- Skid-tube ☐
- Machining ☐
- Thermoforming ☐
- Large Fab ☐
- Crosstube ☐
- Small Fab ☐
- Finishing ☐
- Composite ☐
- Water Jet ☐
- Prod. Eng. Coor. ☐
- Rec/Store/Packaging ☐
- Supplier ☐
- Engineering ☐
- Quality ☐
- Other ☐

Root Cause		Date	Step	Qty	Description of work order update or Non-conformance	Initial Chief Eng	Action Description	Sign & Date	Verification	QC Inspector
Doc/Data	☐									
Equip/Tooling	☐									
Operator	☐									
Material	☐									
Setup	☐									
Other	☐									
Process	☐									
Supplier	☐									
Training	☐									
Unapproved	☐									

FAULT CATEGORY

Landing Gear

- ☐ Bending
- ☐ Centre Not Concentric to O/S
- ☐ Cracks
- ☐ Crushed/Crimped
- ☐ Cuffs
- ☐ Heat Treat
- ☐ Inspection Strip in Tube
- ☐ Ripples in Bend
- ☐ Torque Waves in Extrusion
- ☐ Turning Sequence
- ☐ Wave/Twist in Tube

General

- ☐ Bend
- ☐ BOM/Route
- ☐ Broken/Damaged
- ☐ Burrs
- ☐ Contamination
- ☐ Countersink
- ☐ Cut Too Short
- ☐ Drill Holes
- ☐ Drawing
- ☐ Finish
- ☐ Folio
- ☐ Grain
- ☐ Hardware
- ☐ Inspection Incomplete
- ☐ Instructions Incomplete/Unclear
- ☐ Maintenance
- ☐ Mislabeled
- ☐ Misread
- ☐ Offset
- ☐ Out of Calibration
- ☐ Out of Sequence
- ☐ Outside Dimensions
- ☐ Ovalized
- ☐ Over/Under tolerance
- ☐ Part Incorrect
- ☐ Part Lost/Missing
- ☐ Part Moved
- ☐ Positioned Wrong
- ☐ Power Loss/Surge
- ☐ Pressure/Forced
- ☐ Temperature/Cure
- ☐ Weld
- ☐ Wrong Stock Pulled
- ☐ Other

_____

_____

_____

Solve Composites
29 Distribution Way
Suite 101
Plattsburgh, NY 12901
Phone: 518-324-3838
Fax: 518-324-5530

Packing List

Bill To: Dart Aerospace
1270 Aberdeen Street
Hawkesbury, ON K6A 1K7
Canada

Ship To: Dart Aerospace
1270 Aberdeen Street
Hawkesbury, ON K6A 1K7
Canada

Shipment No: 13571
Shipment Date: 09/28/12
Ship Via: Fedex Freight
Order Number: 12043
Order Date: 09/21/12

Customer Code: DART
Phone: (613) 632-9577
PO Number: 17976
Terms: Net 30 Days

	Quantity							
Item	Open	Shipped	Back Ord	Canceled	Unit	Description	Revision	Job Number
7	1	1	0		EA	D350-604-041P D350-604-041P Rear Locker Extender	F	12043-07
8	1	1	0		EA	D350-604-041P D350-604-041P Rear Locker Extender	F	12043-08

Packing Clerk's Initials
Solve Composites

Received In Good Order By
Dart Aerospace

Certificate of Conformance

Solve Composites

29 Distribution Way

Plattsburgh, New York, 12901

USA

Dart Aerospace Order Number: 17976

Part Number: D2273

Quantity: 2

Drawing Number: D2273, DT8020

Serial Number (s): 0038, 0039 8/7/10/02

Date: September 28, 2012

Non-Conformances: None

This is to certify that the parts identified above conform to all applicable drawings and/or specifications as evidenced by reports on file, and that all other purchase order and quality requirements have been met.

Jerry Reyell

Jerry Reyell

Project Manager

Solve Composites

Item ID: D350-604-041

BOM Type: Production

Status	Item ID	Rev	Name	Start Date	antity	FJO	Mop	Daute	Seq	crap	'ap	Quar	mmer	ind	NEC	ID	Sort	time	Offset	an	Ty	1	Per	Orrch	to	Vore	Cde	Last	Mdd	Date
	2600-6		Camlock Stud	7/21/2009	4.0...	Ea		110	0 %	0.0000							0	0	MRP									8/13/...	12/5...	
	2600-LW		Camloc Retaining...	2/7/2012	4.0...	Ea		110	0 %	0.0000							0	0	MRP									2/7/2...	2/7/...	
	D2268		Decal	12/5/2009	1.0...	Ea		140	0 %	0.0000							0	0	MRP									8/13/...	12/5...	
	D2269		Decal	9/27/2012	1.0...	Ea		140	0 %	0.0000							0	0	MRP									9/27/...	9/27...	
	D2728-1		Dart Logo label	9/13/2012	1.0...	Ea		140	0 %	0.0000							0	0	MRP									9/27/...	9/13...	
	D350-604-041P		Rear Locker Exten...	1/1/2008	1.0...	Ea		110	0 %	0.0000							0	0	MRP									4/4/2...	12/5...	